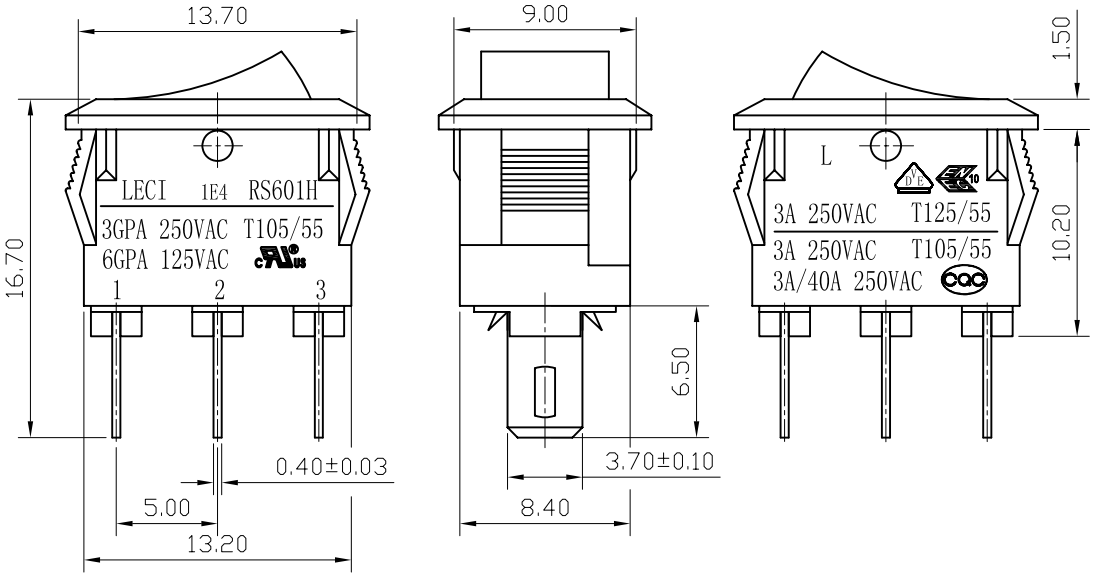


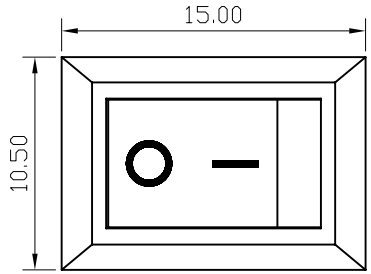


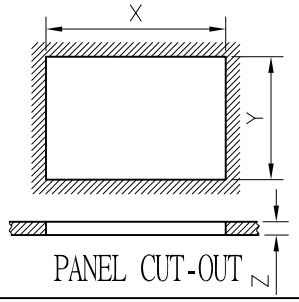


PANEL CUT-OUT

| PANEL CUT-OUT | | |
|---|---|---|
| Z | Y | X |
| 0.70～1.25 | 9.00～9.10 | 13.50～13.60 |
| 1.25～2.00 | 9.00～9.10 | 13.60～13.70 |

NOTES:

1.Rating:
VDE ENEC 3A 250VAC T125/55
UL cUL 6GPA 125VAC/3GPA 250VAC T105/55
CQC 3A 250VAC,3A/40A 250VAC T105/55

2.Circuit Diagram:3P ON-ON

3.Terminal Strength:≥40N

4.Electrical life:≥10000 cycles

5.Withstand Voltage:Withstand Voltage:1500VAC 1min
Terminals to Button:3000VAC 1min
Leakage Current:1mA

6.Current resistance:≤50mΩ(initial)

7.Insulation resistance:≥100MΩ

8.Body Materil:NYLON 66 94V-0~2

SWITCHING CIRCUIT

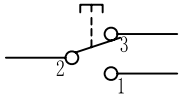


| | | | | | | | | | | | | |
|---|---|---|---|---|---|---|---|---|---|---|---|---|
| A4 | | | | 普通公差: COMMON TOLERANCE : | | 深圳市华灿天禄电子有限公司 | | | | | | |
| A3 | | | | | | | | | | | | |
| A2 | | | | UP TO 5 | ±0.20 | 单位 UNIT | mm | 投影 PROJECTED | | 品名 PRODUCT NAME | 跷板开关 | 比例 SCALE | Free |
| A1 | | | | ABOVE 5 TO 30 | ±0.30 | 绘图 DRAWN BY | 周金勇 | 核对 CHECKED BY | 梁金勇 | 型号 MODEL NO. | RS601H | | |
| | | | | ABOVE 30 | ±0.50 | | | | | | | | |
| REV. | DATE | REVISION DESCRIPTION | ISSUE | ANGULAR | ±5° | 日期 DATE | 2015.09.19 | 核准 APPROVAL BY | 周培雷 | 图号 DWG NO. | RS601HL-1020011BB | | |