ROHS

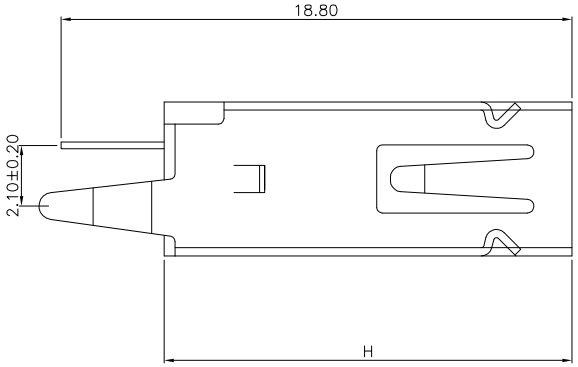

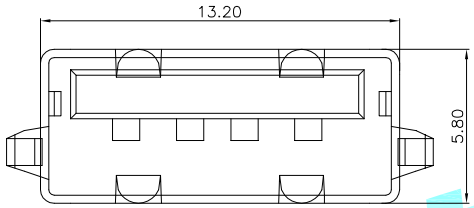

特性:Specifications;
电器:Electyical:
接触阻抗:Contact Resistance
30 millionms MAX
耐电压:Dielectyic Withstanding Voltage:
500v AC AT Sea Level
绝缘阻抗:Insulation Resistance:
1000 MEGA ohms MLN
机构:Machanical:
接合为:Mating Force;
4.0 KG MAX 最大4Kg
拔出力:Unmating Force;
0.7KG MIN.最少0.7KG

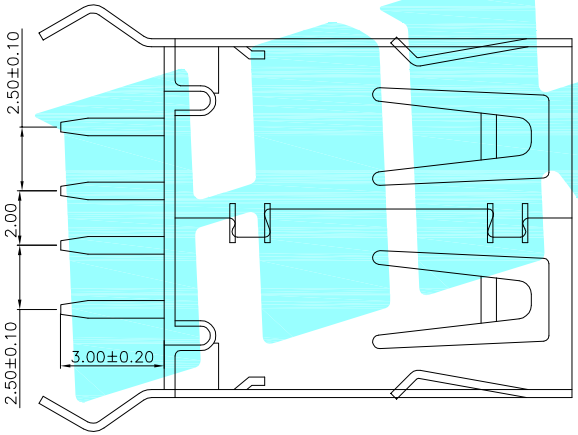

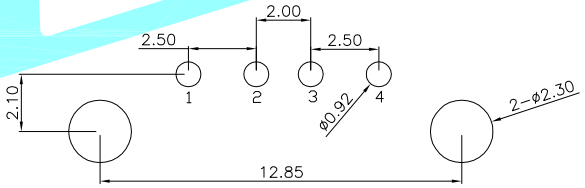

Recommended PCB Layout

PART NO	H
U-A-24DD-W-2	13.00
U-A-24DD-W-3	13.70
U-A-24DD-W-4	15.00

ITEM	PART NAME	TER'NO.	QTY.	MATERIAL	FINISHING
③	Base	——	1	NYLON	White
②	Terminal	——	4	Phosphor Bronze	Ag Plated
①	Housing	——	1	SPCC/Phosphor Bronze	Ni Plated

APPROVALS		DATE
DRAWN	JIANKUN.LU	2015.03.18
CHECKED		
APPROVALS		

HRO韩荣® ELECTRONICS CO.,LTD

TITLE: USB CONNECTOR

PART NO.

TOLERANCES ARE			ANGLE
	30~以上	±0.30	±2°
	10~30	±0.25	
	5~10	±0.20	
	~ 5	±0.15	

UNIT: mm | SCALE: 1:1 | PROJ:

DRAWING NO. ——— | SHEET 1 OF 1

ECN NO.	REV.	DATE.	DESCRIPTION.	CHANGE.	CHECK.	APPRO.
———	A	———	NEW	———	———	———